Multifunctional Whole-Home AI Monitoring Sensor (HT-W) User Manual



V 1.0

Content

1. Application Scenarios 1

2. Product Function 1

3. Product Appearance 2

4. Installation 3

4.1 Installation Procedure 3

4.2 Detection Range 3

4.3 Notes 4

4.4 Actual Installation Location and Installation Guidelines 4

5. Application Scenarios 6

Human Presence Detection 6

People Counting 6

Fall Detection 6

Respiration & Heart Rate Monitoring 6

Sleep Quality Monitoring 6

6. Network Connection Setup 7

6.1 Power-On Initialization and Self-Test 7

6.2 Parameter Settings 7

7. Indicator Status and Performance Fault Table 9

8. Product Specifications 9

9. Precautions 9

10. Frequently Asked Questions 10

1. Application Scenarios

The Multi-Functional AI Home Care Sensor (HT-W) is a 60GHz mmWave radar-based device designed to sense human movements and postures. By combining advanced algorithms with application logic, it enables precise sensing of people within indoor areas, including people counting, location tracking, heart rate and respiration monitoring, fall detection, and sleep quality analysis.

With reliable and stable performance, strong interference resistance, and privacy-friendly sensing without the use of cameras, the HT-W can be widely applied in elderly care, home security, and other indoor safety applications. It uses a Wi-Fi wireless network to transmit event information and device status in real time.

2. Product Function

People Counting & Position Tracking: Real-time detection of the number and location of people within the detection area (0–5 people).

Fall & Presence Detection: Simultaneous detection of falls involving multiple people (0–3 people), with phone call and voice prompt alerts.

Respiration & Heart Rate Monitoring: Detects the respiration and heart rate of a person in bed (1 person) and outputs real-time measurements at 3-second intervals.

Sleep Monitoring: Identifies awake, light sleep, and deep sleep states, tracks the number of times a person gets out of bed, and generates an overall sleep quality score (1 person).

Bed & Room Entry/Exit Detection: Provides timely notifications when people enter or leave the bed or room (0–3 people).

3. Product Appearance

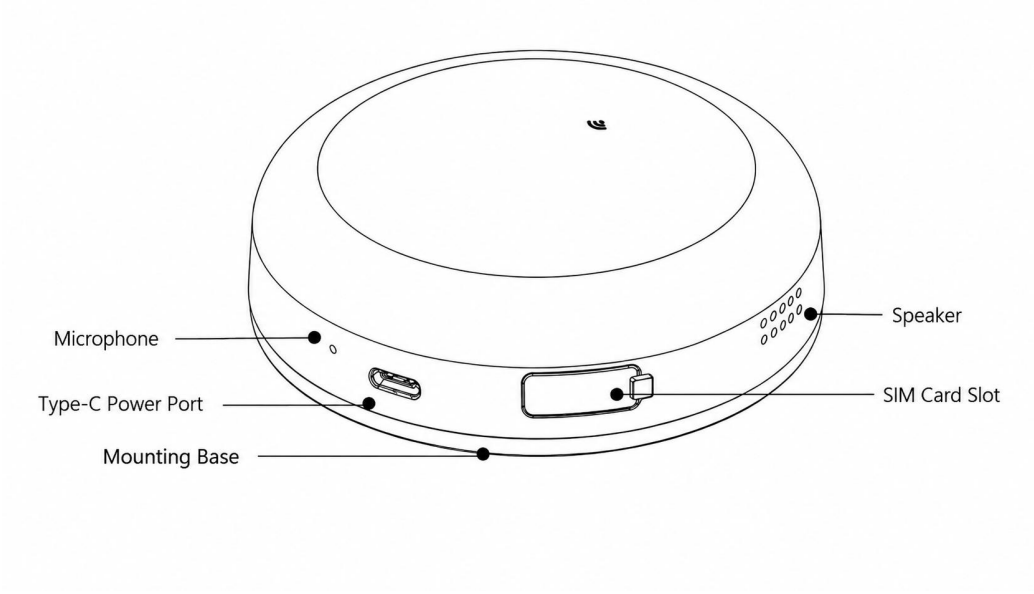

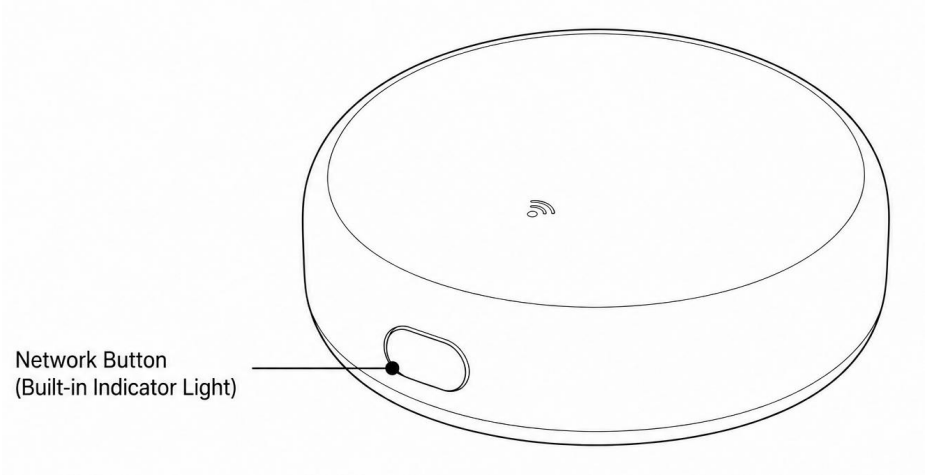

*This product adopts a universal hardware platform design and can be used across multiple product models. Therefore, certain interfaces or functional modules, such as the SIM card slot, microphone, and speaker, may be reserved on the hardware but may not be supported or enabled on all models.

Please refer to the functions and configurations described in this user manual for the actual specifications of your product.

4. Installation

4.1 Installation Procedure

Ceiling Mounting: Install the device on the ceiling at a height of 2.4 – 3.0 m, ensuring that the radar's main beam adequately covers the detection area.

Secure the Device: Fix the mounting base with screws. Align the device with the slots on the mounting base and ensure that the base is securely installed without wobbling.

Keep the Detection Area Clear: Ensure that there are no metal objects or large obstacles directly in front of the device that could obstruct the radar signal.

Power On and Connect: Power on the device, configure the network connection, and connect the device to the App.

4.2 Detection Range

Ceiling-Mounted Detection: When the device is installed horizontally on the ceiling, the maximum detection coverage is approximately 6 m*4 m, as shown in the figure below.

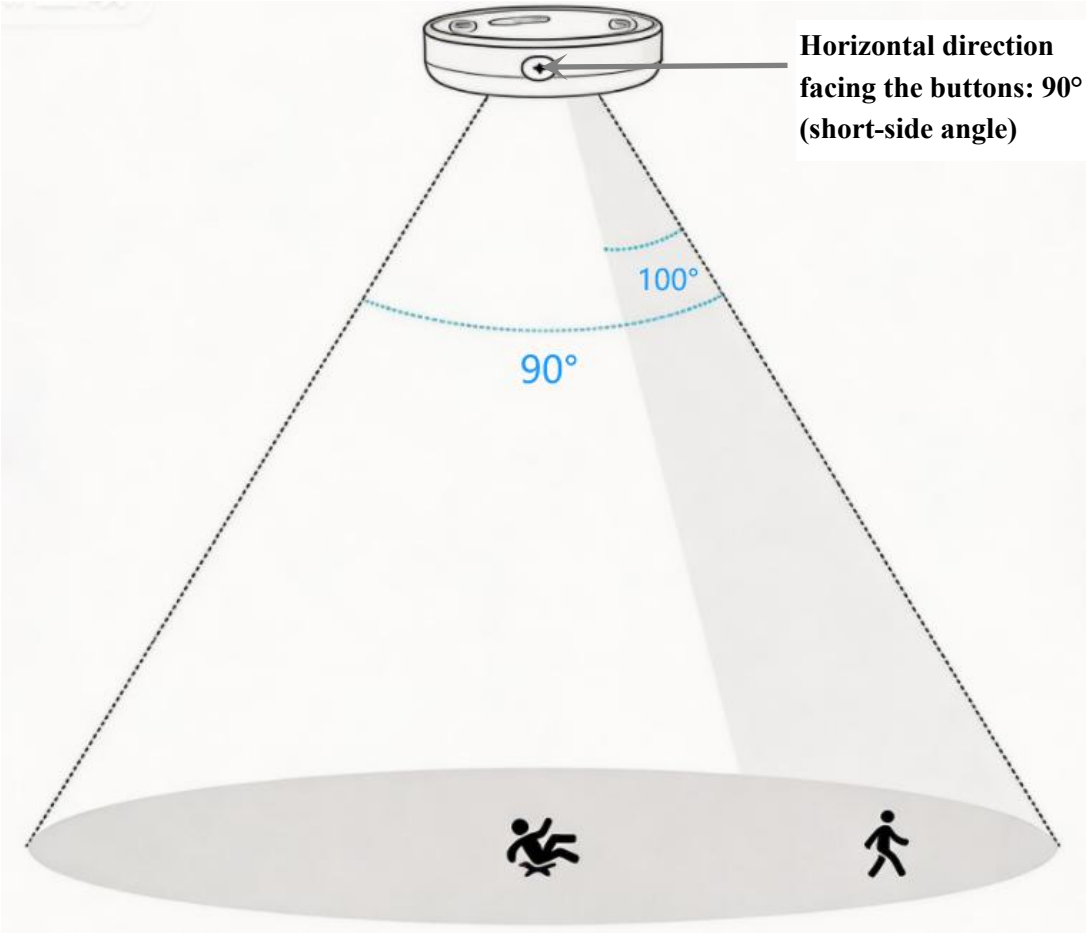

4.3 Notes

Caution! Do not install the device near sources of vibration, such as exhaust fans or incandescent lamps, as they may affect detection performance.

Caution! Do not install the device directly above a ceiling fan or near obstacles such as large ceiling lights, pendant lights, or cabinets. Any object obstructing the radar's field of view may prevent detection in the obstructed area.

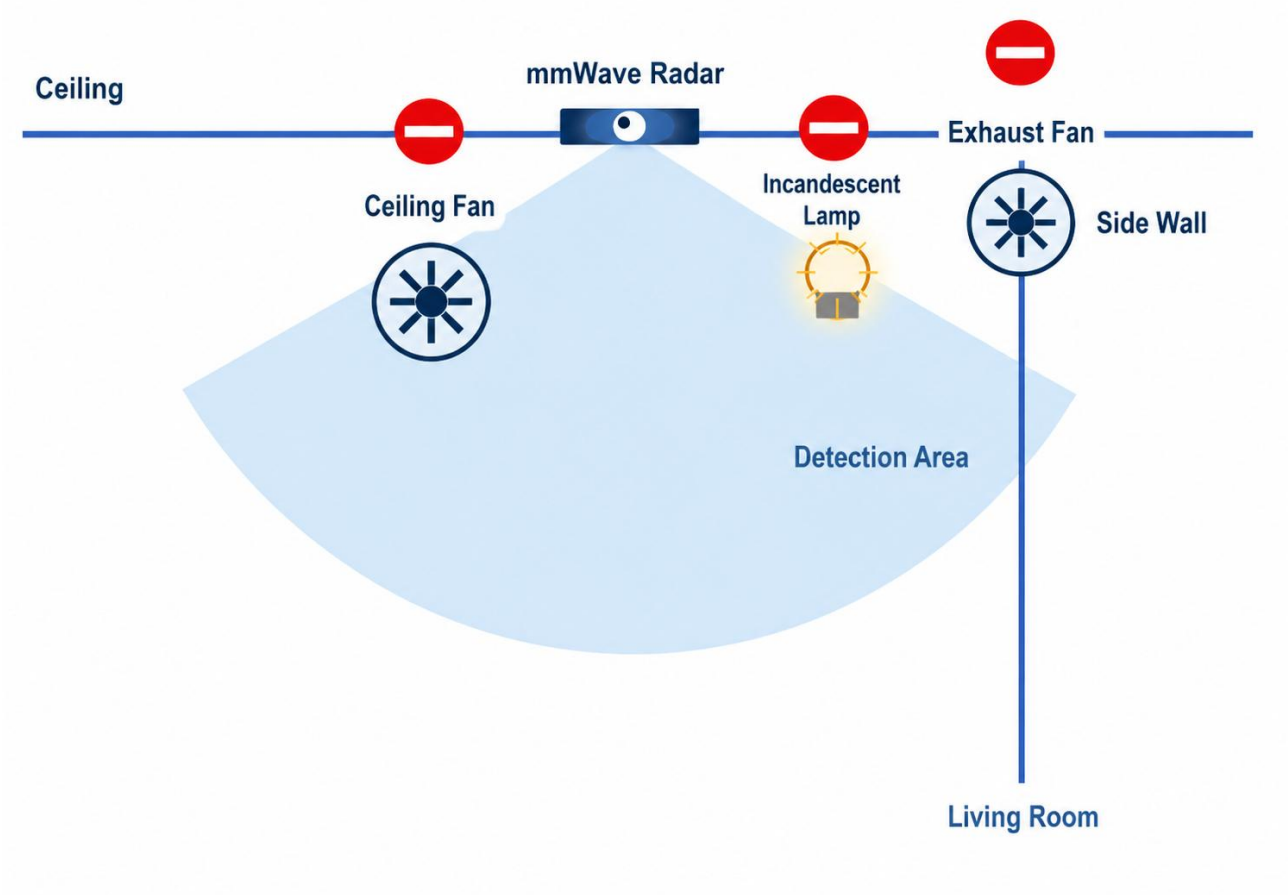

4.4 Actual Installation Location and Installation Guidelines

People Counting Function:

Identify the main areas where people are active and stay. When configuring the radar detection area, the actual door location must be included within the detection area.

Using the radar as the center point, the detection area should extend upward, downward, left, and right. The detection area is configured and delivered through the "configuration file" interface.

Fall Detection Function:

Install the device away from vibration sources and at the center of the area to be monitored. For wet/dry separated areas, install the device on the dry side.

Respiration & Sleep Monitoring:

For ceiling-mounted installation, position the device as directly above the person's chest as possible. If the installation position cannot be perfectly aligned, the device may be offset by no more than 50 cm.

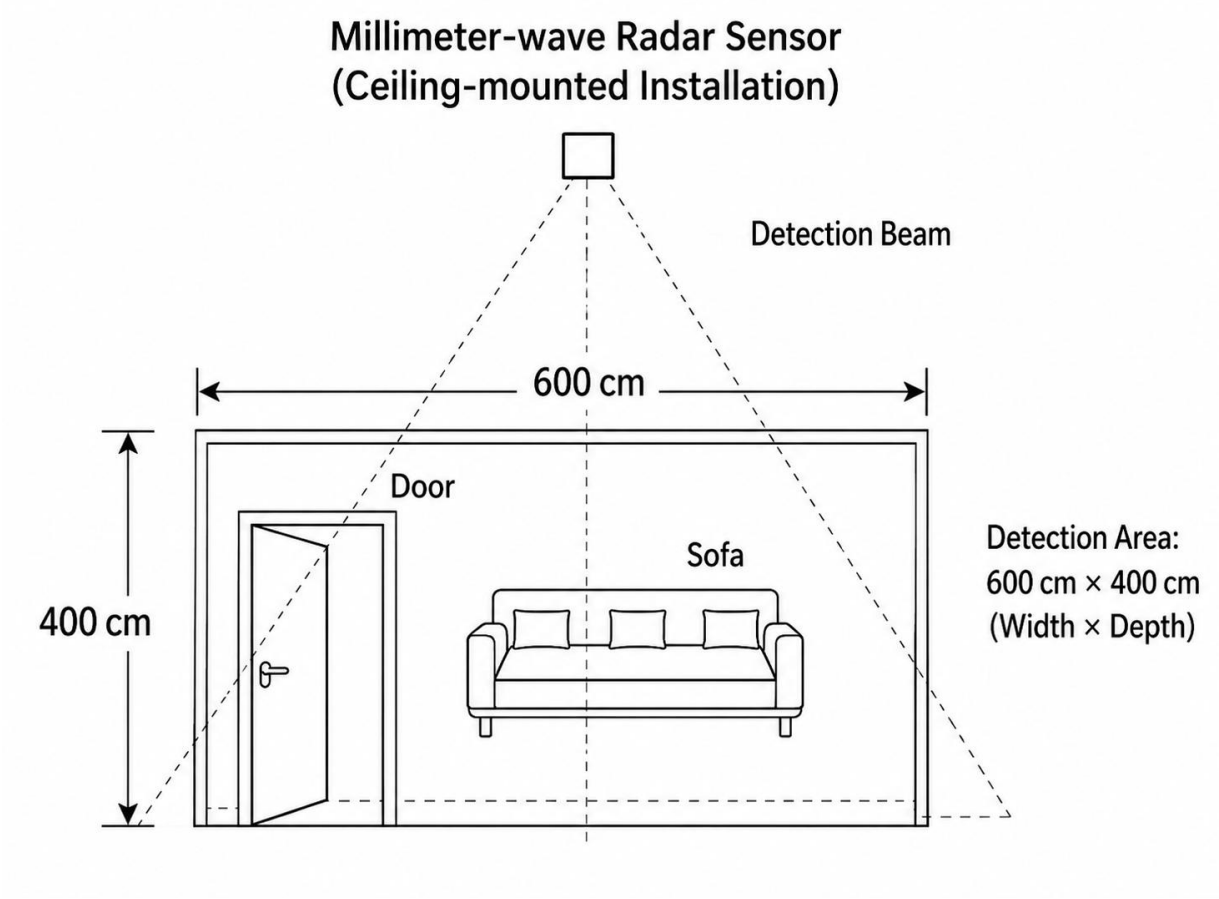



5. Application Scenarios

5.1 Human Presence Detection

This is a basic function of the device. It enables real-time monitoring of whether a person is still present in a room or designated area, helping reduce the operational workload and associated staffing costs.

5.2 People Counting

The people counting function mainly includes two capabilities: entry/exit detection and real-time reporting of the number of people in a room, including trajectory information.

- Room Entry/Exit Detection:

When an elderly person leaves the radar detection area, the system can provide a reminder or trigger an alarm based on the configured absence duration.

- Real-Time Room Occupancy Reporting:

The system can report the number of people currently present in the room in real time, which is useful for scenarios such as caregiver assistance or monitoring whether a person has remained in a specific area for an extended period.

5.3 Fall Detection

When a person falls within the detection area and remains on the ground for more than 30 seconds without getting up, the device triggers an initial alarm. The device continues monitoring the event for up to 2 minutes. The alarm and monitoring duration can be configured according to specific application requirements.

5.4 Respiration & Heart Rate Monitoring

Within the monitored bed area, the device can continuously monitor the person's respiration rate and heart rate ①beats per minute) in real time. Configurable upper and lower thresholds are supported to trigger alarms when the respiration rate or heart rate is too high or too low.

5.5 Sleep Quality Monitoring

Sleep quality monitoring includes bed entry/exit detection, light/deep sleep detection, and the number of body turns, among other parameters. Based on actual sleep data collected over different periods, the system intelligently generates a comprehensive sleep quality analysis report.

6. Network Connection Setup

Refer to the *Quick Start Guide* for more information on network connection and parameter settings.

6.1 Power-On Initialization and Self-Test

Step 1. After the device is powered on, it enters the initialization and self-test process. The network configuration indicator remains off during this process. For more information on the indicator status and faults, please refer to Section 7. Indicator Status.

Step 2. Press and hold the button to initiate network configuration. The red indicator starts flashing, and the device enters Bluetooth-based network configuration mode to connect to the server. Network configuration is performed using the "EspBlufi" app, which supports open-source code.

Step 3. During the network configuration process:

- If there is a network issue and registration fails, the red indicator turns off.
- If the device fails to connect to the server, the red indicator remains steadily on.
- If the device does not connect to the network or receive any user operation within 90 seconds, the network configuration process will time out and exit automatically.

Step 4. After the device successfully connects to the cloud platform, the indicator turns off and the device enters normal operating mode.

6.2 Parameter Settings

Device parameters are configured remotely through the platform.

(1) Installation Height
The installation height must be set to match the actual installation height of the device.

- Unit: cm
- Default: **240 cm (recommended)**
- Range: **200–300 cm**

(2) Radar Detection Range
This parameter is used to configure the detection area for **people counting and trajectory tracking**.

- Unit: cm
- Default: **200 cm radius**
- Maximum configurable range:
  - X-axis: **±250 cm**
  - Y-axis: **±200 cm**

- It is recommended to set the detection boundary slightly inside the actual physical boundary, by approximately **0.5 m**, to improve detection accuracy.

(3) Tag Settings
This parameter allows specific attribute tags to be assigned to objects or areas, such as:

- **Door:** used for entry/exit counting
- **Bed:** used for status monitoring
- **Interference Source:** used to define areas for interference suppression

(4) Fall Duration Threshold
When a person's fall duration reaches the configured threshold, the system determines that a **fall event** has occurred.

- Unit: seconds
- Default: **30 s**
- Range: **30–180 s**

(5) Stationary Presence Duration Threshold
When a person remains stationary for the configured duration, the system determines that a **stationary presence event** has occurred.

- Unit: seconds
- Default: **120 s**
- Range: **60–65,535 s**
- For typical projects, a setting of **1,800 s (30 minutes) or longer** is recommended.

(6) Sleep End Time Threshold
This parameter defines the condition for determining when a sleep session has ended. By default, the sleep session is considered to have ended when the person remains **out of bed for 5 consecutive minutes**.

- Unit: minutes
- Range: **5–30 minutes**

(7) External Sleep Cycle Control Switch & Settings
The device supports manual control of sleep start and end events. Enable the **external sleep cycle control switch**, after which the start and end of the sleep session will be controlled by **external sleep start/end commands**.

7. Indicator Status and Performance Fault Table

Red indicator flashing	The device is in network configuration mode.
Red indicator off	The device is operating normally.
Red indicator continuously on	The device failed to connect to the server.
Green indicator off	The device is connected to the server and operating normally.

Troubleshooting Table

Item	Troubleshooting
Multifunctional Whole-Home AI Monitoring Sensor (HT-W)	1. Surface cracks or damage caused by structural or material defects 2. Indicator light failure 3. Reset button failure 4. Network connection failure 5. Human presence detection failure

8. Product Specifications

Product Name	Multifunctional Whole-Home AI Monitoring Sensor
Model	HT-W
Radar Operating Frequency	61GHz～61.5GHz
Installation Method	Ceiling-mounted (detection surface facing downward)
Installation Height	2.4–3.0 m above the floor
Human Presence Detection Range	5 m*4 m area, approximately 20 m²
Human Fall Detection Range	5 m*4 m area, approximately 20 m²
Stationary Presence Detection Range	5 m*4 m area, approximately 20 m²
Detection Angle	Horizontal: 100°; Vertical: 90°
Power Input	5 V / 2 A, USB Type-C
Wireless Protocol	Wi-Fi
Operating Temperature	-10℃~+60℃
Operating Humidity	20% – 85% RH (non-condensing)

9. Precautions

1) The radar is a non-contact device. To detect a target's respiration and heart rate, the device

must first locate and lock onto the target, and then collect and calculate the intensity and values of the target's respiration and heart rate. Therefore, the target should remain within the effective detection range and maintain a relatively stationary state during measurement. Continuous movement may interfere with target tracking and affect respiration and heart rate detection.

2) The detection distance is significantly affected by the target's Radar Cross Section (RCS) and environmental conditions. The effective detection range may vary depending on the environment and the target. Therefore, fluctuations in the effective detection distance within a certain range are considered normal.

3) Human physiological signals are ultra-low-frequency signals with weak reflections. Radar processing requires relatively long-term signal accumulation. During this accumulation process, various factors may affect radar parameters, so occasional detection failures may occur and are considered normal.

4) Do not use this product in locations with no network signal or poor signal strength. Poor network connectivity may affect product functionality.

5) Pay attention to the installation location. Avoid installing the product near air conditioners, electric fans, curtains, plants with large leaves, or other objects that may generate vibration or movement signals. Avoid large areas of strong-reflection objects within the radar detection area, and avoid exposing the product directly to sunlight.

6) This product can monitor human presence, respiration, sleep, and other events, but it cannot guarantee failure-free operation under all circumstances. For safety, in addition to using this product correctly, users should remain vigilant and take appropriate preventive measures.

7) This product is intended for indoor use only. Keep the surface of the product clean and free from dirt or stains, as these may affect the product's sensitivity and detection accuracy. If the product becomes dirty, wipe it with a dry cloth. Do not clean the product with corrosive solvents. Do not place objects in front of the product, as they may obstruct the radar and affect detection performance.

10. Frequently Asked Questions

1) Interference Factors

The radar is an electromagnetic-wave-based sensing device. Moving non-living objects may cause false alarms or false detections. Movement of metal objects or liquids may also result in incorrect detection.

Common sources of interference include electric fans, pets moving close to the radar, and moving metal curtains. The radar installation angle should therefore be carefully planned to minimize interference.

2) Non-Interference Factors

Radar electromagnetic waves can penetrate clothing, curtains, thin wooden boards, and glass. The installation angle and detection performance should be determined according to the specific application scenario.

3) Potential Interference Factors

For human presence detection, the radar should not be installed directly facing an air conditioner. The motor inside an air conditioner may cause false detection. The radar should therefore not directly face the air conditioner or be installed in the same direction as the air

conditioner.